LONG SEAMS

COURSE	ORIENTATION	ORIENTATION
1(TOP)	30°	210°
2	36°	216°
3	30°	210°

*VERT – TOP TO BOTTOM

Ship loose items:

- BOTTOM SHELL COURSE WITH FLAT BOTTOM ALL NOZZLES, ANCHOR CHAIRS AND INTERNAL CONE WITH SUPPORT RING
- MIDDLE SHELL COURSE WITH MANWAY AND NAMEPLATE
- UPPER SHELL COURSE WITH RIM ANGLE TOP CONE AND NOZZLES.

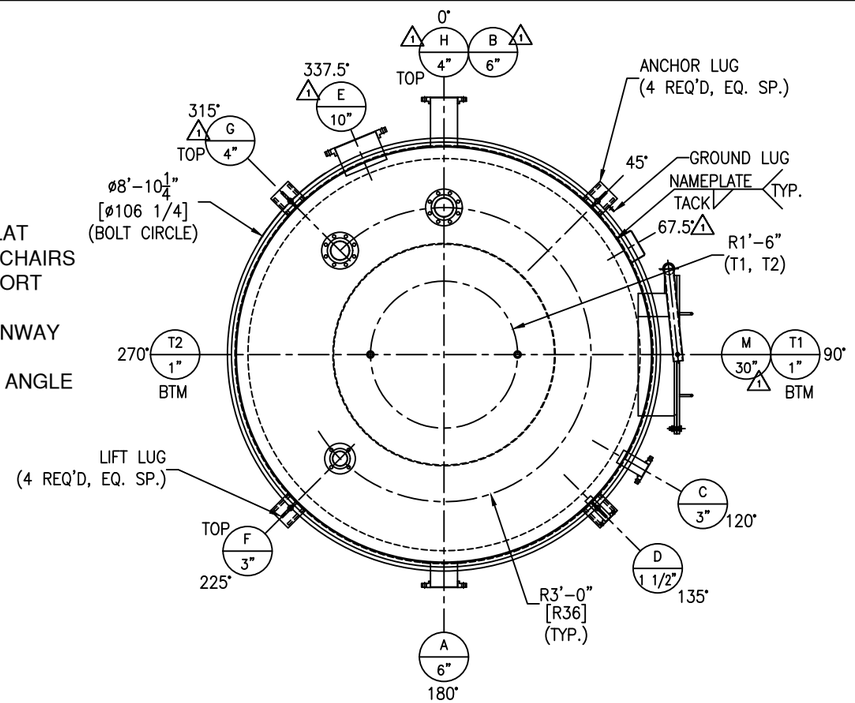

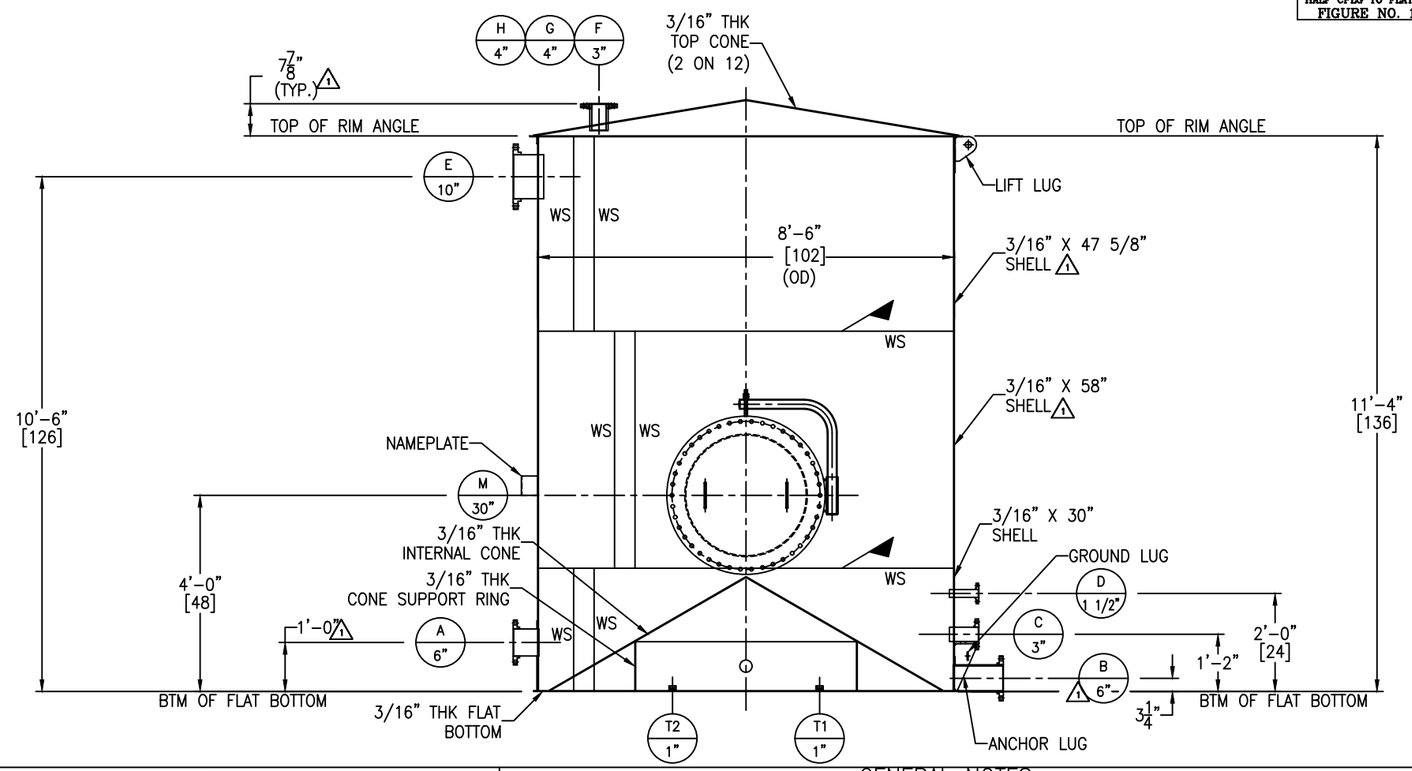

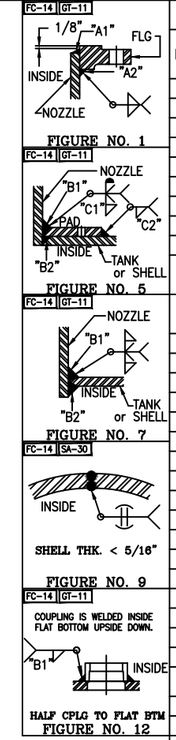

NOZZLE SCHEDULE

MARK	SERVICE	SIZE	RATING	TYPE / STYLE	NECK SCHED.	PROJECTION EXT. (℄)	PROJECTION INT. (MIN.)	WELD FIGURE	REPAD SIZE (WIDTH X THK.)	WELD SIZE "A1"	"A2"	"B1"	"B2"	"C1"	"C2"
M	MANWAY	30"	–	API W/DAVIT	1/4"	6"	1"	7	–	–	–	3/16	3/16	–	–
A	OUTLET	6"	150#	RFSO	40S	6"	–	1,5	2" X 3/16" (DOGHOUSE)	1/4	1/4	1/4	1/8	3/16	3/16
B	DRAIN	6"	150#	RFSO	40S	6"	–	1,5	2" X 3/16" (DOGHOUSE)	1/4	1/4	1/4	1/8	3/16	3/16
C	LEVEL TRANSMITTER	3"	150#	RFSO	40S	6"	1"	1,7	–	3/16	3/16	1/4	1/4	–	–
D	TEMP INDICATOR	1 1/2"	150#	RFSO	80S	6"	1"	1,7	–	3/16	3/16	1/4	1/4	–	–
E	OVERFLOW	10"	150#	RFSO	40S	6"	1"	1,7	–	1/4	1/4	1/4	1/4	–	–
F	RECIR. INLET	3"	150#	RFSO	40S	SEE DWG	1"	1,7	–	3/16	3/16	3/16	3/16	–	–
G	BLOWDOWN INLET	4"	150#	RFSO	40S	SEE DWG	1"	1,7	–	1/4	1/4	3/16	3/16	–	–
H	BLOWDOWN INLET	4"	150#	RFSO	40S	SEE DWG	1"	1,7	–	1/4	1/4	3/16	3/16	–	–
T1	TEST CPLG	1"	3000#	HALF THRD CPLG W/ PLUG	–	–	–	12	–	–	–	1/8	–	–	–
T2	TEST CPLG	1"	3000#	HALF THRD CPLG W/ PLUG	–	–	–	12	–	–	–	1/8	–	–	–

MATERIALS OF CONSTRUCTION

	VESSEL
SHELL	SA240–304/304L
TOP CONE/ FLAT BOTTOM	SA240–304/304L
RIM ANGLE	SA479–304/304L
INTERNAL CONE & SUPPORT RING	SA240–304/304L
NOZZLE NECKS	SA312–304/304L WLD
NOZZLE FLANGES	SA182F–304/304L
MANWAY NECKS	SA240–304/304L
MANWAY FLANGES	SA240–304/304L
GASKETS	GARLOCK 3000
BOLTS/STUDS	SA193–B7 (ZINC PLATED)
NUTS	SA194–2H (ZINC PLATED)
REPADS	SA240–304/304L
COUPLINGS	–
SUPPORTS/HOLD DOWNS	SA240–304/304L
LIFTING LUGS	SA240–304/304L
INSULATION RINGS	–
GROUND LUG	SA240–304/304L
BAFFLE	–
LADDER	–
TANK CLIPS (LADDER)	–
HANDRAIL	–
HANDRAIL CLIPS	–
PLATFORM	–
PLATFORM CLIPS	–
DIPTUBE SUPPORT	–
JACKET SHELL	–
JACKET HEADS	–
JACKET NOZZLE NECKS	–
JACKET NOZZLE FLANGES	–

DESIGN DATA

	VESSEL
DESIGN AND FAB. CODE	API650
CERT. STAMP REQ'D.	NO
DESIGN PRESSURE	ATM
DESIGN TEMPERATURE	380° F
MIN. DESIGN METAL TEMP.	–20° F @ ATM
OPERATING PRESSURE	ATM
OPERATING TEMPERATURE	–
JOINT EFFICIENCY HEADS	0.70
JOINT EFFICIENCY SHELL	0.70
CORROSION ALLOWANCE	0"
SPECIFIC GRAVITY	1.30
EARTHQUAKE ZONE	Ss = (0.059) S1 = (0.025)
WIND LOAD	147 MPH
STRESS RELIEF	NOT REQ'D
RADIOGRAPHIC EXAM	NOT REQ'D
DYE PENETRANT EXAM	NOT REQ'D
MAGNETIC PARTICLE EXAM	NOT REQ'D
PNEUMATIC TEST (INTERNAL CONE)	2 PSIG
PNEUMATIC TEST (VESSEL)	2 PSIG (BY CUSTOMER)
JKT DESIGN AND FAB. CODE	–
JKT CERT. STAMP REQ'D.	–
JKT DESIGN PRESSURE	–
JKT DESIGN TEMPERATURE	–
JKT MIN. DESIGN METAL TEMP.	–
JKT OPERATING PRESSURE	–
JKT OPERATING TEMPERATURE	–
JKT JOINT EFFICIENCY HEADS	–
JKT JOINT EFFICIENCY SHELL	–
JKT HYDRO TEST	–

VESSEL FINISH

INTERIOR WELD TREATMENT:	SAV TANK STANDARD
EXTERIOR WELD TREATMENT:	SAV TANK STANDARD
SAV TANK FINISHING STANDARD:	SEE NOTE 6
INSULATION:	N/A
PAINTING:	N/A

VESSEL CAPACITY AND WEIGHTS

OPERATING CAPACITY	4,030 GAL.
FULL CAPACITY	4,500 GAL.
EMPTY SHIPPING WEIGHT	5,100 LBS.
WEIGHT FULL OF WATER	43,200 LBS.
WEIGHT FULL OF PRODUCT	54,700 LBS.

QUALITY CONTROL

ENG. _____ DATE: _____

Q.C. _____ DATE: _____

This drawing is issued for customer approval. please review, make approval changes (if any) in red. check the appropriate box, sign & date.

- ☐ Approval – no changes. Please proceed with fabrication.
- ☐ Approved as noted. Please proceed with fabrication
- ☐ Not approved. Please make changes and resubmit.

Customer signature _____ Date _____

GENERAL NOTES

1.) COVER ALL FLANGES, OPENINGS & MACHINED SURFACES PRIOR TO SHIPMENT UNLESS OTHERWISE NOTED.
2.) BOLT HOLES TO STRADDLE 0° & 180° UNLESS OTHERWISE NOTED.
3.) NOZZLE REPADS TO HAVE (1) ø1/4" TELL–TALE HOLES ON HORIZONTAL CENTER LINE.
ALL OTHER REPADS TO HAVE (1) ø1/4" WEEP HOLE AT LOWEST POINT ON PAD.
4.) MANUFACTURING TOLERANCE TO BE IN ACCORDANCE WITH API STANDARD 650 7.5.
5.) ASME MATERIALS TO CONFORM TO THE FOLLOWING: FLANGES – B16.5, FITTINGS – B16.9 & COUPLINGS – B16.11.
6.) PICKLE ALL EXTERIOR WELDS. PASSIVATE INTERIOR & EXTERIOR OF VESSEL.

REVISIONS

REV	D.BY	C.BY	DATE	DESCRIPTION
2				AS BUILT
1	RS	NP	2/19/26	CERTIFIED
0	AD	RS	1/23/26	APPROVAL

Savannah Tank & Equipment Corp.
1517 Telfair Road, Savannah, GA 31415
(912) 233–8902

DRAWN BY: AD
CHK'D BY: RS
APPROVED BY: NP
SCALE: 1/2" = 1'–0"

UNITED STATES SUGAR CORPORATION
POLISHING & TRAP FILTER
BLOWDOWN TANK
EQUIP. #
CUST. PO #4500439212

DRAWING NO.: 005–26–1 SHT 1 OF 4 REV. SET 1

FC-14

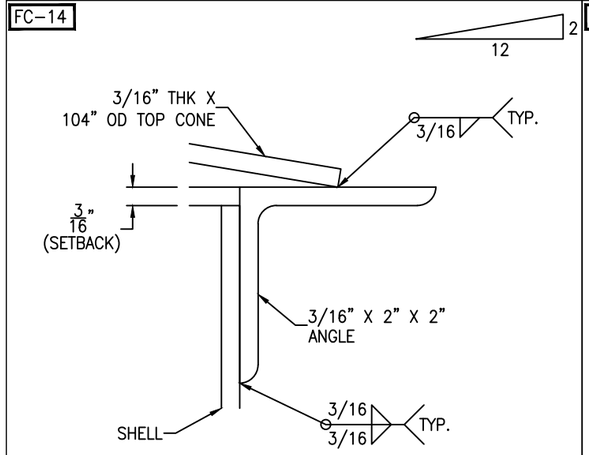

RIM ANGLE DETAIL

SCALE: 1'-0" = 1'-0"

FC-14

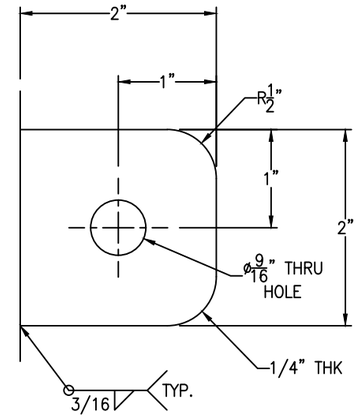

GROUND LUG IS LOCATED @ 45°

GROUND LUG DETAIL

(1 REQ'D) SCALE: 1'-0" = 1'-0"

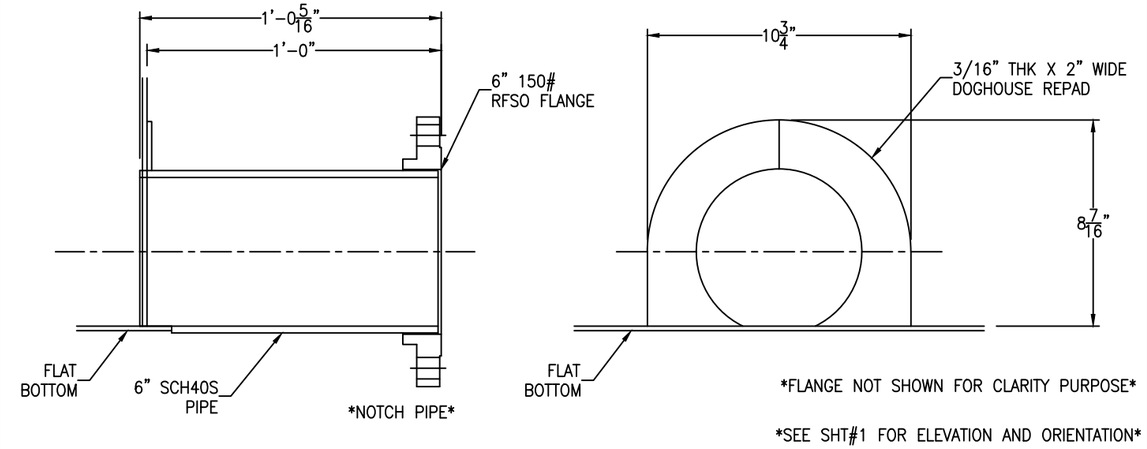

1 NOZZLE B DETAIL

SCALE: 3" = 1'-0"

FC-14

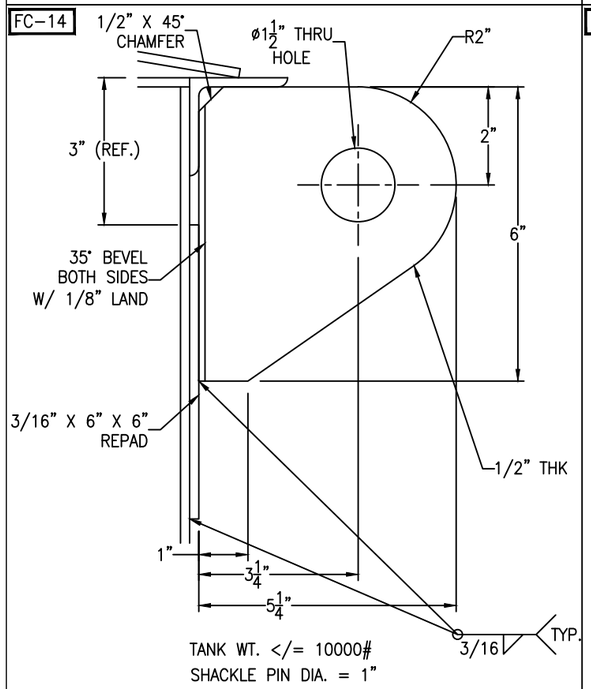

LIFT LUG DETAIL

(4 REQ'D) SCALE: 6" = 1'-0"

FC-14

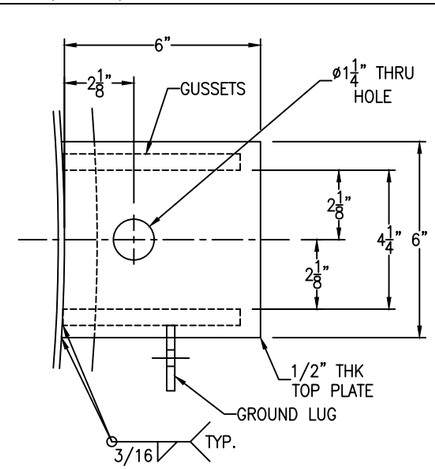

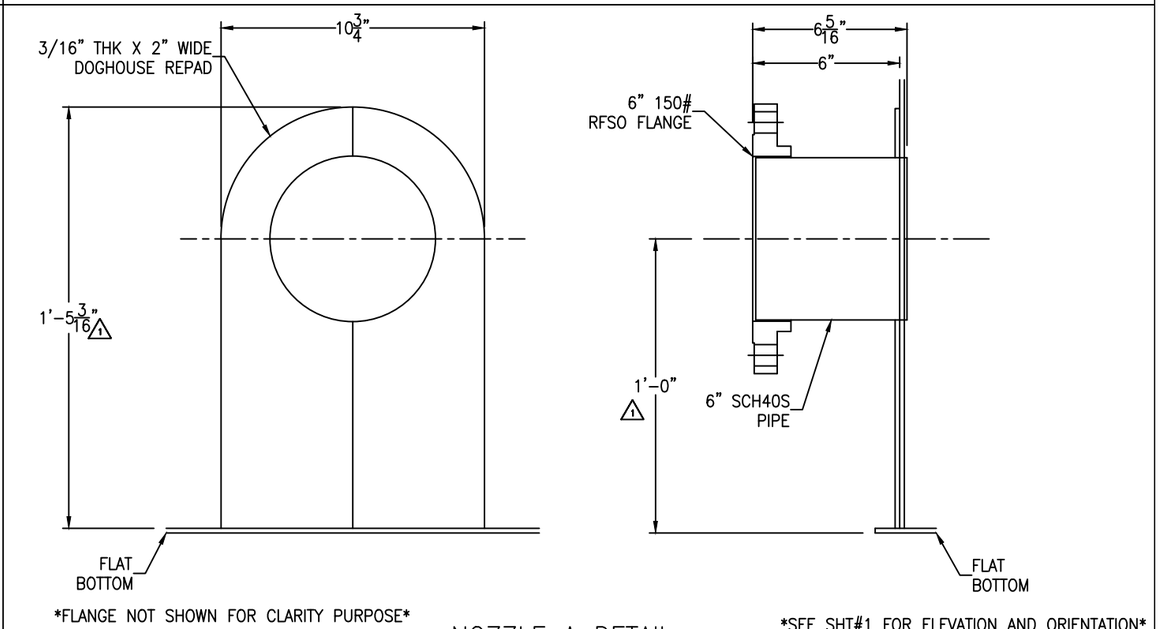

NOZZLE A DETAIL

SCALE: 3" = 1'-0"

FC-14

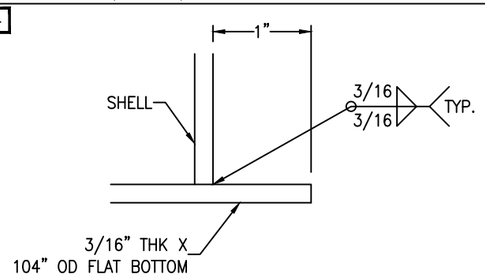

FLAT BOTTOM DETAIL

SCALE: 1'-0" = 1'-0"

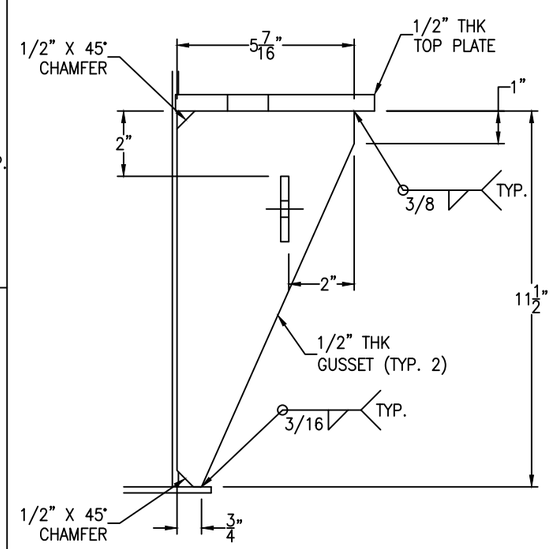

ANCHOR LUG DETAIL

(4 REQ'D) SCALE: 4" = 1'-0"

REV	D.BY	C.BY	DATE	DESCRIPTION
2				AS BUILT
1	RS	NP	2/19/26	CERTIFIED
0	AD	RS	1/23/26	APPROVAL

1 REVISIONS

Savannah Tank & Equipment Corp.
1517 Telfair Road, Savannah, GA 31415
(912) 233-8902

DRAWN BY: AD
CHK'D BY: RS
APPROVED BY: NP
SCALE: 1/2" = 1'-0"

UNITED STATES SUGAR CORPORATION
POLISHING & TRAP FILTER
BLOWDOWN TANK
EQUIP. #
CUST. PO #4500439212

DRAWING NO.: 005-26-2 | SHT 2 OF 4 | REV. SET 1

FC-14

NOTE: THREADED HALF COUPLINGS ARE WELDED UPSIDE DOWN FOR TESTING INTERNAL CONE.

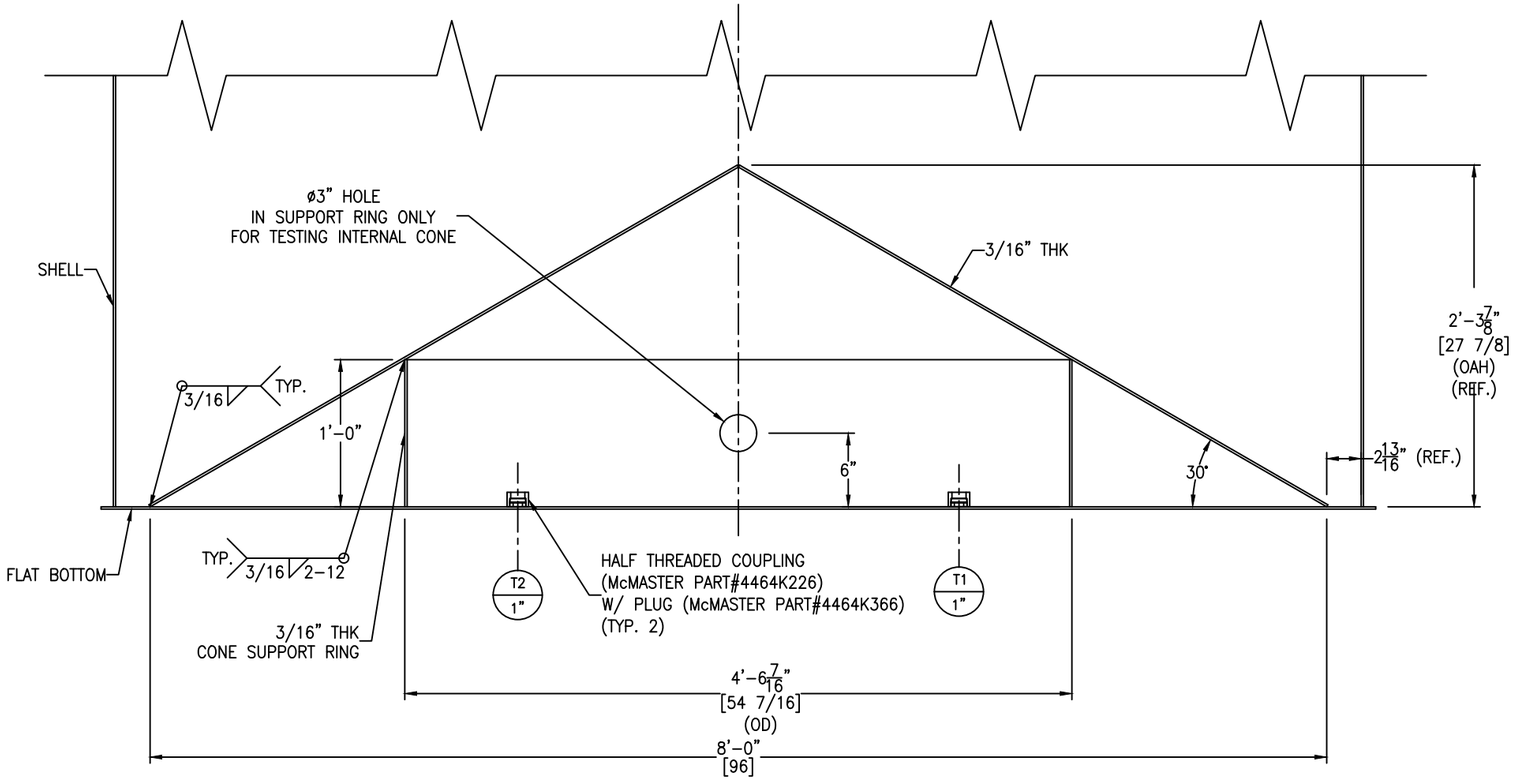

INTERNAL CONE DETAIL

SCALE: 1 1/2" = 1'-0"

REV	D.BY	C.BY	DATE	DESCRIPTION
2				AS BUILT
1	RS	NP	2/19/26	CERTIFIED
0	AD	RS	1/23/26	APPROVAL

⚠ REVISIONS

Savannah Tank & Equipment Corp.
1517 Telfair Road, Savannah, GA 31415
(912) 233-8902

DRAWN BY: AD
CHK'D BY: RS
APPROVED BY: NP
SCALE: 1/2" = 1'-0"

UNITED STATES SUGAR CORPORATION
POLISHING & TRAP FILTER
BLOWDOWN TANK
EQUIP. #
CUST. PO #4500439212

DRAWING NO.: 005-26-3 SHT 3 OF 4 REV. SET 1

FC-14

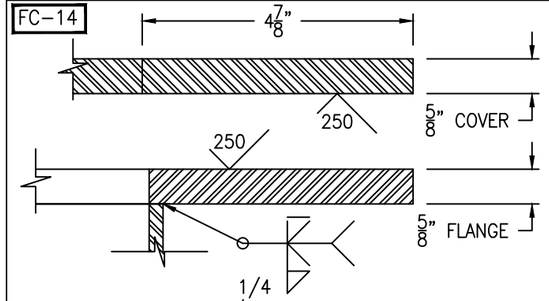

FLANGE/COVER DETAIL

(1 REQ'D) SCALE: 6" = 1'-0"

FC-14

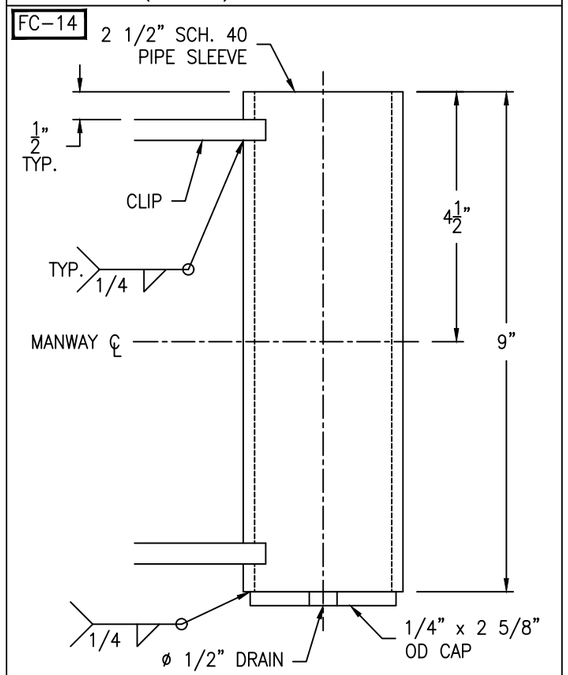

SLEEVE DETAIL

(1 REQ'D) SCALE: 6" = 1'-0"

FC-14

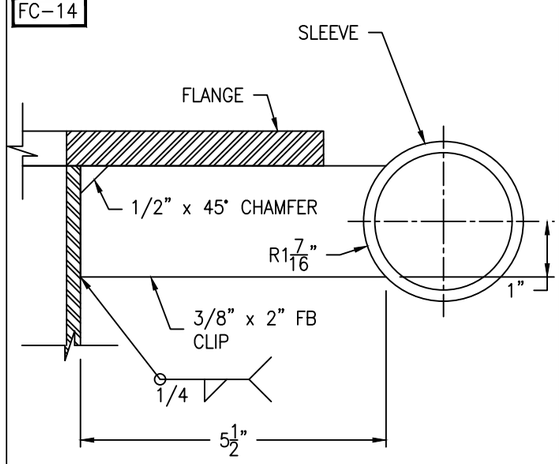

CLIP DETAIL

(2 REQ'D) SCALE: 6" = 1'-0"

FC-14

Bolting for blind
(42) 3/4-10 NC x 2 1/2" HH BOLT
(42) 3/4-10 NC HH NUT
(1) 35 3/8" OD x 30" ID x 1/8" GASKET

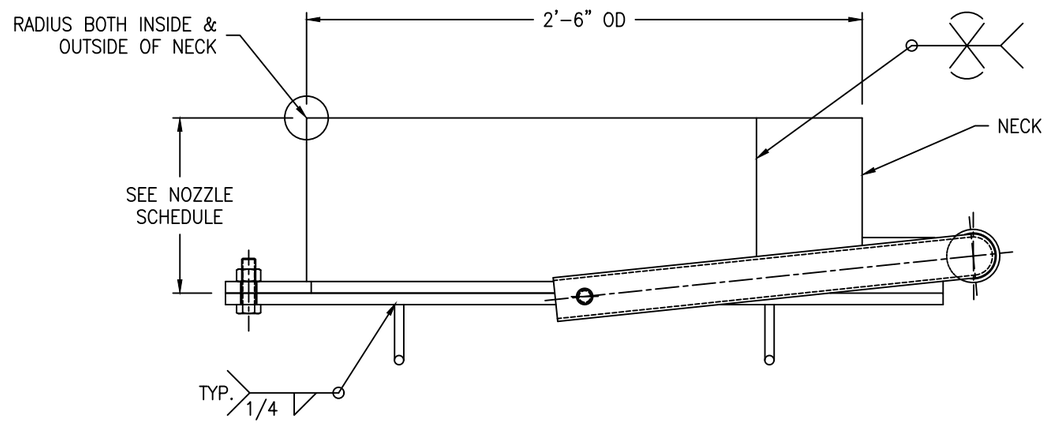

SEE SHT #1 FOR DAVIT ORIENTATION

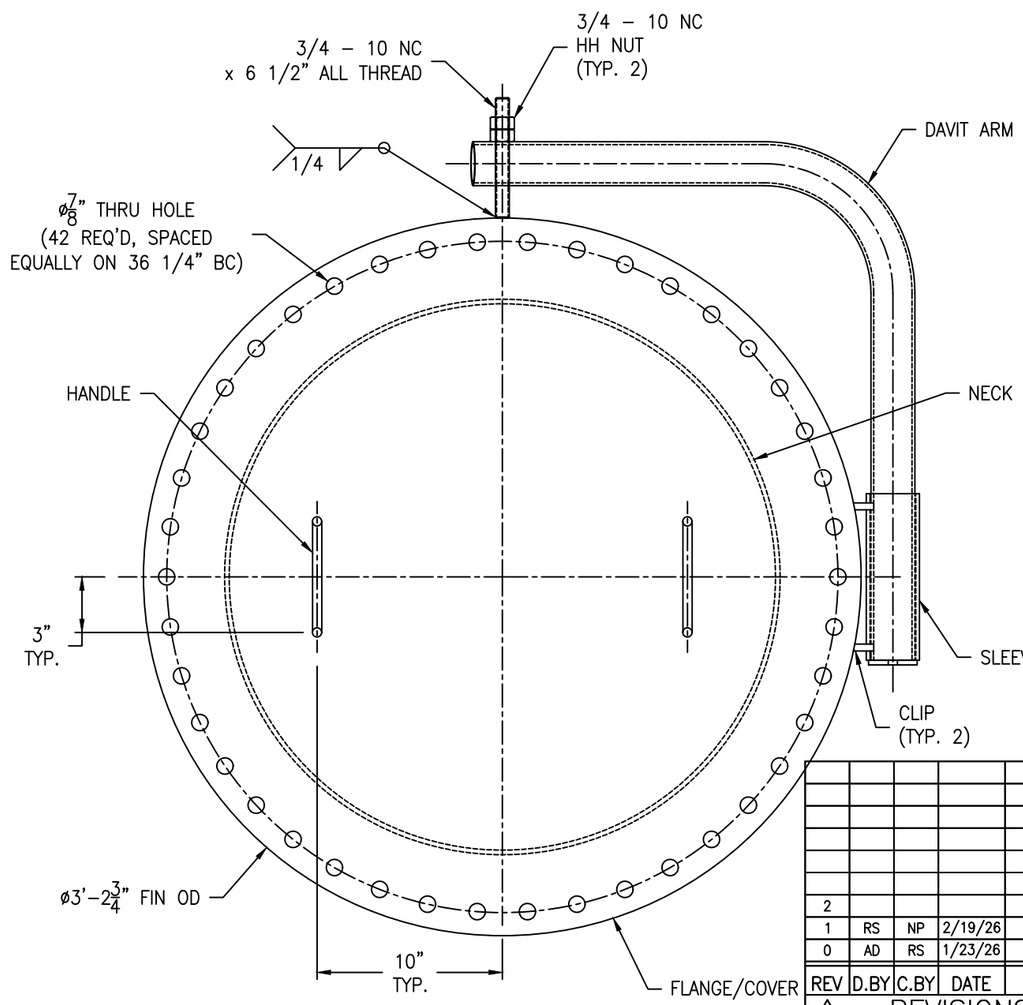

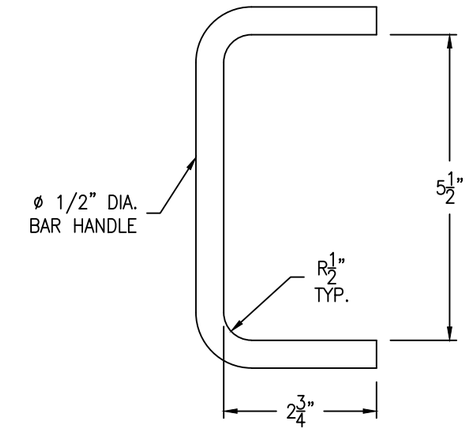

HANDLE DETAIL

(2 REQ'D) SCALE: 6" = 1'-0"

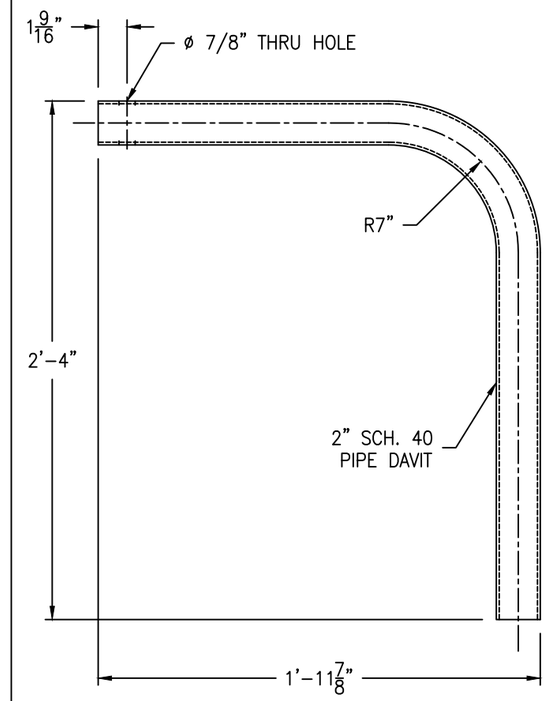

DAVIT ARM DETAIL

(1 REQ'D) SCALE: 2" = 1'-0"

REV	D.BY	C.BY	DATE	DESCRIPTION
2				AS BUILT
1	RS	NP	2/19/26	CERTIFIED
0	AD	RS	1/23/26	APPROVAL

⚠1 REVISIONS

Savannah Tank & Equipment Corp.
1517 Telfair Road, Savannah, GA 31415
(912) 233-8902

DRAWN BY:	AD
CHK'D BY:	RS
APPROVED BY:	NP
SCALE:	1/2" = 1'-0"

UNITED STATES SUGAR CORPORATION
POLISHING & TRAP FILTER
BLOWDOWN TANK
EQUIP. #
CUST. PO #4500439212

DRAWING NO.: 005-26-4 | SHT 4 OF 4 | REV. SET 1